An Amateur Radio publication for the Microwave Enthusiast

scatterpoint

Published by the UK Microwave Group

2010 MARCH

What's this? UKuG Committee members actually operating on the HF Bands!
Photo Left: G4FSG on 80m SSB **Photo Right:** G6JYB, rear of picture, with fist mic, on HF! Read all about it in the Editor's column on page 2 ...

In this issue ...

Latest News ...

- **Low activity continues to affect Scatterpoint input**
- **South Yorkshire Microwave Roundtable programme now available – see page 3**
- **UKuG Microwavers QSY to HF for a weekend !**

MANY THANKS TO ALL OUR CONTRIBUTORS THIS MARCH ... WITHOUT YOU THERE WOULD BE NO SCATTERPOINT!

UK Microwave Group Contact Information

Chairman: G4BAO Dr. John C. Worsnop **Email:** chairman@microwavers.org **Located:** Cambridgeshire (JO02CG) **Address:** 20 Lode Avenue, Waterbeach, Cambs, CB25 9PX **Home Tel:** ++44 (0)1223 862480	**General Secretary: G8KMH Lehane Kellett** **Email:** secretary@microwavers.org **Located:** Hampshire (IO91) **Address:** Honey Cottage, Bent Street, Nether Wallop, Hants., SO20 8EJ **Home Tel:** ++44 (0)1264 781786	**Membership Secretary: G8DKK Bryan Harber** **Email:** membership@microwavers.org **Located:** Hertfordshire (IO91VX) **Address:** 45 Brandles Road Letchworth Hertfordshire, SG6 2JA **Home Tel: n/a**	**Treasurer: G4FSG Graham Murchie** **Email:** treasurer@microwavers.org **Located:** Suffolk (JO02) **Address**: 42 Catherine Road, Woodbridge, Suffolk, IP12 4JP **Home Tel:** ++44 (0)7860 356775
Scatterpoint General Editor: G3PHO, Peter Day **Email:** editor@microwavers.org **Located:** South Yorkshire (IO93GJ) **Address:** 146 Springvale Road, Sheffield, S6 3NU, United Kingdom **Home Tel:** ++44 (0)114 2816701 (after 6pm)	**Scatterpoint Activity News Editor: G8APZ Robin Lucas** **Email:** scatterpoint @microwavers.org **Located:** Essex (JO01DO) **Address:** 84 Woodman Road Brentwood Essex, CM14 5AZ **Home Tel:** ++44 (0)1277 211126	**Contest & Awards Manager: G3XDY John Quarmby** **Email:** g3xdy@btinternet.com **Located:** Suffolk (JO02OB) **Address:** 12 Chestnut Close, Rushmere St. Andrew, Ipswich, Suffolk, IP5 1ED **Home Tel:** ++44 (0)1473 717 830	**RSGB Microwave Manager: G6JYB Murray Niman** **Email:** g6jyb@microwavers.org **Located:** Essex (JO01) **Address:** 55 Harrow Way Great Baddow Chelmsford Essex, CM2 7AU **Home Tel:** ++44 (0)1245 474969

From the Editor's Desk

The low activity on the microwave bands continues to affect this publication. For the third month running, Robin can only write up two pages of activity news. Where has everyone got to? What are you folk doing these days? Please let Robin and myself know. Your Ofcom licence is a licence to experiment and transmit. If you never transmit then you don't really need a licence! Maybe you have spent the entire winter building gear ready to burst onto the summer contest and tropo lift scene... who knows? Those of you who post to the UK Microwave Reflector might copy the same info to this newsletter as not everyone looks at the reflector. Indeed some deliberately shy away from it.

Could it be that our front page photos hold the secret? G4FSG, G6JYB, G4HUP and G4DDK were all heard on SSB on more than one HF bands a couple of weekends ago! Have they at last decided to join your scribe in these fresh pastures?

These intrepid explorers of the spectrum below 1GHz found the variable propagation, and the large antennas required, a little overwhelming as they sought to contact the world from **GB75BRS** and **GB75CH** during the 75th anniversary weekend of the Daventry Radar Experiment. Organiser Murray, G6JYB made the historic 11am contact with Bawdsey and Daventry from GB75CH at Great Baddow, while G4FSG and others manned the Bawsdey Manor station GB75BRS. More information can be pound at:

www.g0mwt.org.uk/events/gb75ch-2010/gb75ch.htm

Well done you lads! Maybe you'll now come on the UK Microwave net every Tuesday on 3625kHz from 0830 local time onwards?

73 from Peter, G3PHO
Editor

News, views and articles for this newsletter are always welcome. Please send them to G3PHO (preferably by email) to the address shown above. **The closing date is the Friday at the end of the first full week of the month** if you want your material to be published in the next issue.

South Yorkshire Microwave Round Table

This event takes place over the weekend of **10/11 July 2010** and will be held, as last year, at the HQ of the Finningley Amateur Radio Society near Doncaster. **By the time you read this registration facilities and more information** should be online at:

http://www.g0ghk.co.uk/

Just follow the links on the left side of the homepage. If the information is still not updated from last year's, try again a week later!

The programme is as follows:

SATURDAY 10th July, 10am—4.30pm

Microwave Beginners' Workshop

* Introduction to Microwaves
* Getting started on 23cm and 10GHz
* Antennas for microwaves
* Surface mount techniques (including practical workshop)
* 'Hands on' operating – outdoors

The emphasis will be on practical, hands on activities (weather permitting)

Course leaders: G3PHO, G3PYB, G4HJW

Sandwich lunches will be available at low cost

Prior registration is essential as numbers will be limited to approximately 20 attendees

SATURDAY EVENING: Pub meal and get-together at the nearby Green Tree pub. All are welcome, beginners and those attending Sunday's event.

SUNDAY 12th July:

Microwave Round Table Meeting

* 10am-1200 noon: Informal
* 1200 noon-1pm: Lunch (sandwiches)
* 1.15—4.30: LECTURES

ALL DAY: LARGE FLEA MARKET & BRING AND BUY plus ANTENNA TEST RANGE

Note: Prior registration for Sunday is also essential as numbers will be limited to approximately 50 attendees

UK MICROWAVE GROUP SUBSCRIPTION INFORMATION

The following subscription rates now apply. **Please make sure that you pay the stated amounts** when you renew your subs next time. If the amount is not correct your subs will be allocated on a pro-rata basis and you could miss out on a newsletter or two!

Your personal renewal date is shown at the foot of your address label if you receive Scatterpoint in paper format. If you are an email subscriber then you will have to make a quick check with the membership secretary if you have forgotten the renewal date. From now please try to renew in good time so that continuity of newsletter issues is maintained. Put a **renewal date reminder** somewhere prominent in your shack (the editor suggests having it tattooed on your forearm!).
Please also note the payment methods and be meticulous with Paypal and cheque details.

Renewal of subscriptions requiring a **paper copy** of Scatterpoint are as follows:

Delivery to:	**UK £**	**US $**	**Eur €**
UK	14.00	-	-
Europe	18.00	36.00	26.00
Rest of World	24.00	48.00	36.00

Payment can be made by:

*** Paypal to ukug@microwavers.org**

or

*** a cheque (drawn on a UK bank) payable to 'UK Microwave Group' and sent to the membership secretary** (or as a last resort, by cash sent to the treasurer!)

The standard membership rate for 2010 is:

UK	**£6.00**
US	**$12.00**
Europe	**€10.00**

This basic sum is for **UKuG membership.** For this you receive Scatterpoint for FREE by email. If you want a paper copy **then the higher rates apply.**

Reverse DDS
a versatile system for locking crystal oscillators

By Brian G4NNS and John G8ACE

PART 2

Phase noise

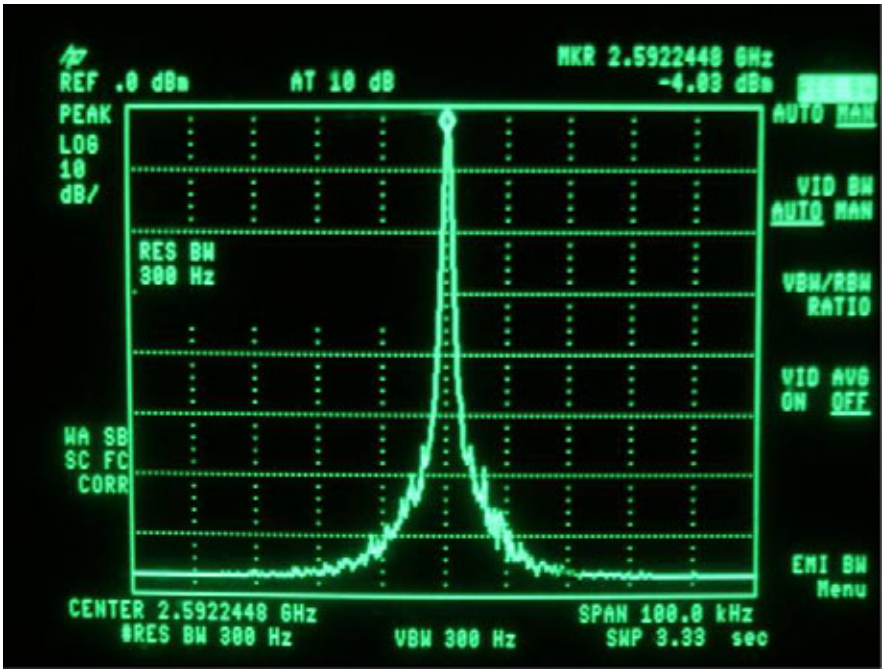

This is the spectrum at 2.5GHz having been multiplied from 108MHz using a DDK004 multiplier module. Note the SPAN is only 100KHz i.e. 10KHz per division.

Phase noise is difficult to measure in most amateur “shacks”. In Paul Wade’s article (Ref 1) he speaks of “close in phase noise” of -28dBc as not presenting a very big problem on receive when trying to detect the smallest detectable signal. Observations with the spectrum analyser suggested that close in phase noise for the Reverse DDS at 2.5GHz and 10.368GHz when multiplied from 108MHz was better than about –65dBc.

In addition to the spectrum analyser observations, a practical approach was adopted to asses the effects of phase noise. The 2.5GHz signal from the DDK004 multiplier was further multiplied to 10368.980MHz using a WDG001 multiplier. The output of this was radiated from

a waveguide transition in the shack and the normal 2MHz of the IF was tuned using the station EME system located some 20meters away. The wanted signal was registering 5 9 +40 on the EME receiver. No degradation was noted once the receiver was tuned more than 10KHz away from the beacon and the system AGC had recovered. Only one other signal was found in the band and that was GB3SCX received by rain scatter. The EME antenna was parked, pointing some 50 degrees away from GB3SCX and with 30 degrees of elevation at the time. So even when multiplied from 108MHz to 10368MHz an OCXO locked using the "Reverse DDS" would appear to be acceptably clean.

In another test a weak beacon on 10368.942MHz was monitored whilst switching the local beacon using the reverse DDS as its master oscillator on and off. The beacon was running some 30mW on 10368.980 and registered S9+40dB on the IF transceivers' S meter. No detrimental effect was noted on the weak incoming signal.

Spurious output

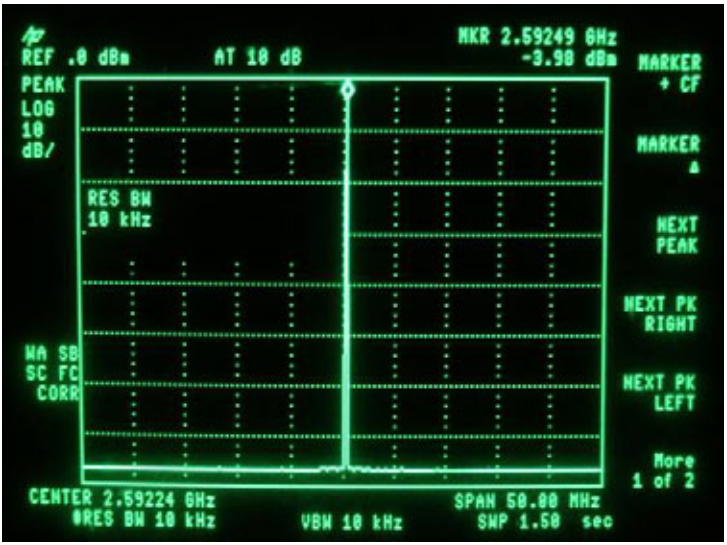

The spectrum at 2.5GHz with a 50MHz span.

Elimination of out of band spurious is of course very important and all normal measures should be taken to keep these to an acceptable minimum level. No special precautions were found to be necessary when using the reverse DDS, provided that excessive drive level from the reference is avoided. This can be assured by using a suitable attenuator before the signal enters the Reverse DDS module. Normal precautions and good practice must be followed to ensure minimum levels of spurious outputs. For example, in making these plots, all covers were fitted to the various modules, interconnecting cables were kept to a reasonable minimum length and the varicap control signal was run in screened cable. Semi rigid cable or its more flexible equivalent should be used for the RF signals.

Calculating the "Frequency Tuning Words"

For the Reverse DDS system to lock the desired frequency the "Frequency Tuning" word to be loaded into the DDS by the PIC has to be calculated. Any reference frequency in the range 5MHz to about 20MHz can be used provided that it's source is sufficiently stable and "clean". These

numbers are stored in EEPROM in the PIC which sends them as required to the AD9851. A calculator is available for these numbers on the G4NNS web site – Reverse DDS page. Here are some examples:-

Reference Frequency in MHz		10.000000		Shift Required in Hz		400		
				Frequency				
Beacon Frequency	Multiplier		XTAL	Tuning Word	HEX		Shift for 400Hz	Resolution Hz
24048.9200	240	MARK	100.203833	428623052	198C44CC	GB3FNM		
24048.9196	240	SPACE	100.203832	428621068	198C44D4		-8	50
10368.9800	96	MARK	108.010208	397644871	17B3931B	GB3MCB		
10368.9796	96	SPACE	108.010204	397644886	17B3932A		-15	26.67
5760.9200	48	MARK	120.019167	357856783	155A760F	GB3FNM		
5760.9196	48	SPACE	120.019156	357856808	155A7628		-25	16
3400.9000	32	MARK	109.278126	404126241	18187639			
2320.9000	18	MARK	128.936889	333101001	13DAB7C9			
10368.9550	96	MARK	108.009948	397645529	17B3A6D9	GB3LEX		
10368.9546	96	SPACE	108.009944	397645549	17B3A6E9		-16	25
10368.8500	96	MARK	108.008854	397649556	17B3A6A4	GB3SEB		
10368.8496	96	SPACE	108.008850	397649571	17B3A6A3		-15	26.67
10368.8300	96	MARK	108.008646	397650323	17B3A993	GB3MHX		
10368.8496	96	SPACE	108.008850	397649571	17B3A6A3			
10368.7500	96	MARK	108.007813	397653391	17B3B59F	GB3CAM		
10369.7496	96	SPACE	108.018225	397615059	17B37FD3			
3400.9350	27	MARK	125.960556	340977163	1452E66B	Prop Bath	MKU BAKE	
3400.9346	27	SPACE	125.960541	340977207	1452E633			

These are some calculations for beacon frequencies.

Reference Frequency in MHz		10.000000					
Local Oscillators				Frequency			
Band	Multiplier	IF	XTAL	Tuning Word	HEX		L.O. Frequency
75976	768	144	98.739583	434479280	19ED41D0		75832.0000
75976	768	432	98.964583	438937573	1A088F85		75544.0000
47088	384	144	122.250000	351326568	14F0D168		46944.0000
47088	384	432	121.500000	353495250	1511E8D2		46656.0000
24048	192	144	124.500000	344877292	148FEF8C		23904.0000
24048	192	432	123.000000	349184333	14D0214D		23616.0000
10368	96	144	106.500000	403283314	18099D72		10224.0000
10368	96	432	103.500000	414972685	19BBFB0D		9936.0000
5760	48	144	117.000000	367691221	15E15E15		5616.0000
5760	48	432	111.000000	388933990	171024E6		5328.0000
3400	24	144	135.666667	316582355	12DEA9D3		3256.0000
3400	24	432	123.666667	347391937	14B39831		2968.0000
2320	18	144	120.888889	355282221	152D2D2D		2176.0000
1296	12	144	96.000000	447392426	1AAAAAAA		1152.0000
1296	12	28	105.666667	406463781	183A2525		1268.0000
1296	12	27.999	105.666750	406463461	183A23E5		1268.0010

These are some calculations for local oscillator frequencies.

You will find the spreadsheet as an Open Office document on the G4NNS Web site. Also as an Excel spreadsheet, but my Excel does not have the DEC2HEX function which you will need. The frequency column is highlighted in blue and you can enter your own choice of frequencies here. The reference frequency and multiplication factors can also be changed to correspond with your system. Change the formulae in the other boxes at your peril!

Changing Frequency Tuning Words by RS232

To alter either the reference frequency or the frequency to be locked, you need to change the "Frequency Tuning" word that the PIC loads into the DDS device. If you are a keen PIC programmer you can do this at source code level and re-programming the PIC. If you are not so keen on altering the PIC code you can use an RS232 terminal set at 2400 bauds, No Parity, 1 stop bit and no flow control to change the contents of the EEPOM within the PIC. If you apply power to the Rev DDS with the terminal connected. This forces the system into its programming mode. The following is a sample session in which the messages you will see are in plain text and the user input is highlighted :-

G4JNT Four Frequency controller for AD9851 DDS
[R]ead EE data / [G]o to DDS / Any other key to change EE
R
0 17B3931B
1 17B3932A
2 04800000
3 00000000
[R]ead EE data / [G]o to DDS / Any other key to change EE. ***SPACE***
Enter Address 0 to 3 **0**
Enter 4 bytes of Hex Data + [cr] **12345678 cr**
ADDR. 0 12345678
[W]rite / [A]bort **W**
[R]ead EE data / [G]o to DDS / Any other key to change EE. **R**
0 12345678
1 17B3932A
2 04800000
3 00000000
[R]ead EE data / [G]o to DDS / Any other key to change EE. **G**

Note that G ends this frequency input mode and returns the DDS to normal operation with the new frequencies. In this example for beacon use (not LO use) the first two bytes of "frequency 2" in the table are used for CW speed and Ident interval. Larger numbers give slower CW speed and longer interval between Idents.

Beacon firmware version

This firmware is available to be shipped with the kit or can be downloaded from the G4NNS web site if you are confident that you can alter the identification information yourself at PIC source code level . It features CW FSK identification and the CW speed, interval between indents and a delay which can be used to hold the beacon OFF for a warm up period whilst the OCXO and reference stabilised after a power outage, can all be changed by connecting an RS232 terminal.
Changing the Call sign
For the time being, the call sign and locator information are embedded in the PIC code and must be changed at source level. The source code is available on the G4NNS web site. It was not felt desirable to make this user alterable. If you want your beacon details to be incorporated in the code and are not able to modify the source code yourself please ask G4NNS who will be pleased to do it for you.

Loss of Lock – Fault conditions for beacons

One advantage of the "Reverse DDS" approach for beacon applications is that it is no more likely that the main oscillator will go out of band than is the case for an ordinary OCXO. This is due to the limited capture range of the system. If set up correctly and routinely maintained as frequently as the rate of ageing of the crystal demands, loss of lock is, in any case, most unlikely. On the other hand, after a power loss, both the reference oscillator and the beacon OCXO are likely to require time to "warm up" and re lock. For this reason a time delayed signal is available from the PIC which can be programmed to only enable the multiplier and power stages of the beacon after a suitable time has elapsed for warm up. It should be noted that as the Frequency Shift Keying relies on the system being locked, identification keying will stop when the beacon OCXO is out of lock. As previously stated, this situation is not likely to arise on a properly maintained beacon with a crystal that has been aged properly. If however it is felt necessary to disable the beacon if this occurs, a simple circuit can be added externally to the Reverse DDS that monitors the control

voltage. If this rises to a maximum level or swings rapidly between maximum and minimum the system is not locked. Swings in control voltage could, for example trigger a long delay timer which could be gated with the high voltage detect so that either condition will disable the beacon.

Local Oscillator Firmware Version

With this version, a table of up to 16 Frequency Tuning Words is stored in EEPROM within the PIC. PORT B bits 4-7 of the PIC are used to select the word to be transferred to the DDS and the loading of the Frequency tuning word to the DDS is initiated at power up and whenever there is a change on Port B. Thus a switch with a simple binary encoder could be used to select one frequency tuning word to be used from the 16 stored.

Another pole of, for example a wafer switch, could select the local oscillator source to be selected for locking. *Note that the use of a wafer switch for this purpose has not been tested and it's effect on spurious output should be checked. It may be necessary to switch off unused oscillators or use a coaxial switch to reduce cross talk.*

Changing the Frequency Tuning words stored in EEPROM is achieved using an RS232 terminal in the same way as for beacons but 16 words , 0-F in Hexadecimal, are available.

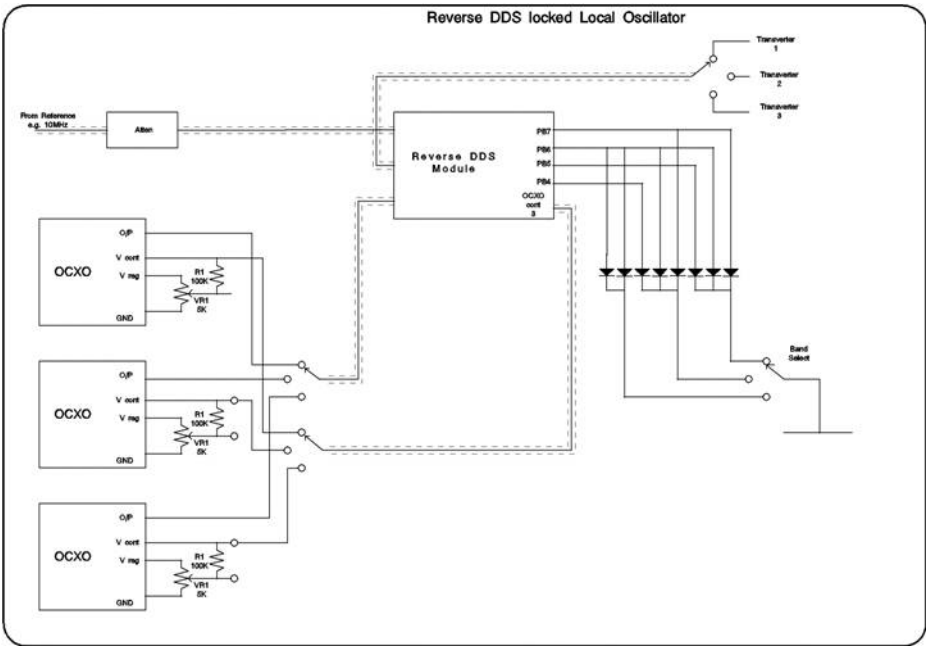

Hints and Kinks

Pitfalls

When testing several oscillators, I sometimes found that there was insufficient OCXO output to drive the DDS (voltage at TP2 low). On every occasion this was because I was monitoring the OCXO, after it had been looped through the DDS board, with a frequency counter having a 1M input. The (near) open circuit presented at the end of an unfortunate length of cable presented a

short circuit at the point at which the OCXO signal is sampled for the DDS. And the moral of this story is ... make sure the OCXO is properly terminated.

The RS232 Interface

This does not comply with the normal RS232 levels but provided the "other" end does it should be OK. When using a PC with Hyperterm and with RS232 ports now being almost extinct on new computers we often have to use USB – RS232 adapters. These will work fine so long as they keep to the rules. You can check this by measuring the voltage between pin 5 (of a 9 way D) which is ground and pin 3 (with the port enabled). The voltage should be significantly negative. For my good USB-RS232 adapter, which works with the reverse DDS, this voltage was about –8.5V. With another USB-RS232 adapter this voltage was about 0V and it did not work with the Reverse DDS.

New Crystals

Most if not all of the cheap and cheerful crystals available at reasonable prices exhibit substantial frequency change with time, particularly when operating at elevated temperature, even where this was specified at the time of purchase. So install your new crystals in an OCXO and run them for as long as possible – time measure in months is good. Do not expect them to remain in "lock range" for ever if taken straight from the box they arrived in. For new beacon installations check that the control voltage is near 50% of V reg from the OCXO as part of your routine maintenance program. If not use the coarse (mechanical) adjustment to bring it back into line.

Reference OCXOs Various

If you have a good quality stable OCXO with any frequency in the range 5-20MHz it should be useable. Simply run the DDSCalc spread sheet and change the reference frequency from 10 to the frequency of your available reference. In the same way, if you have a good quality but stable OCXO of say 10MHz but it's a few Hz off frequency and not easy to adjust onto frequency, again you can simply change the reference frequency to be generated by the DDS to match what you've got. The key requirement for the reference source is that it is stable and not liable to significant further ageing.

Other ideas

In an idle moment I threw together a simple LC VFO with varicap tuning with bits from the junk box. The criteria were that it would tune to approximately 108.0102MHz by coarse adjustment with the potentiometer set to half supply voltage and that the varicap was very loosely coupled to restrict the capture range.

When the Reverse DDS system was connected and with the Frequency Tuning word set for 108.010208 the VFO locked and when multiplied to 10368.980 gave a reasonable T9 note. Additional filtering of the control voltage was tried but resulted in loss of lock. Further study was abandoned for others to follow up. But this could be a useful signal source to have and one that does not need special crystals. The spectrum observed was not suitable for "on air" use but with suitable filtering in the PLL perhaps this problem can be solved. This is one for the experimenter.

Websearch:

G4JNT Beacon software:-	**http://www.g4jnt.com/beacons.htm**
CT1DMK Ref Loc:	**http://w3ref.cfn.ist.utl.pt/cupido/reflock.html**
G8ACE	**http://www.microwaves.dsl.pipex.com/**
G4NNS	**http://myweb.tiscali.co.uk/g4nns/RevDDS.html**
G4HUP	**http://g4hup.com**

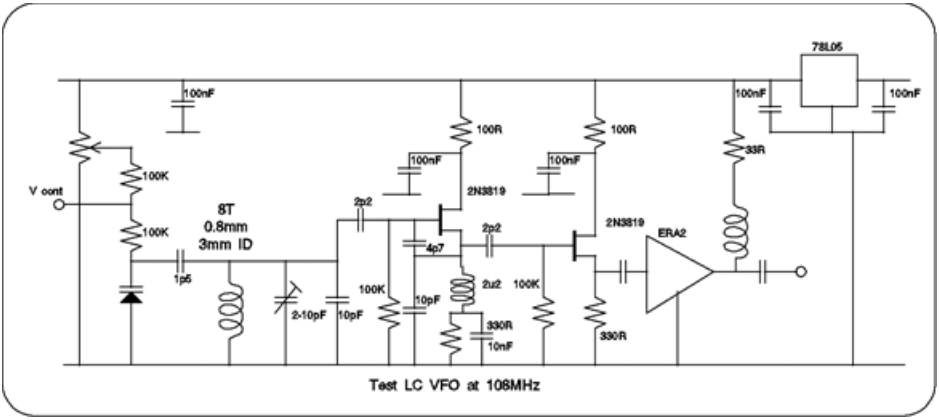

References:

Ref 1. Proceedings of Microwave Update 2009, Phase Noise and MDS, Paul Wade W1GHZ.

Ref 2. A simple way of phase locking microwave local oscillators Andy Talbot G4JNT, Microwave Newsletter April 2004 and **http://www.g4jnt.com/LCKDLOS.HTM**

Important Information Update for Reverse DDS PLL kit builders ... by John G8ACE

Some issues seem to have arisen with Rs and Cs and their placement on the PCB. It was assumed by myself that comparing the parts list with the PCB legend information would be a straight forward issue to minimise the amount of drawings effort needed on this first issue of kits for the Reverse DDS PLL.

To aid pcb parts placement please find attached a pdf drawing where the component values are shown inside the part position rectangles. Producing adequate documentation for all levels of construction ability is a lengthy process and if there is a further run of kits for this project then this and additional drawings would be included for less experienced constructors of course.

Note where component boxes are empty of value this part is not needed for basic operation but is an option, so these parts are not missing from the kit. Values for C21 and C23 shown are the revised values and not those shown in the original parts list.

73 John, G8ACE

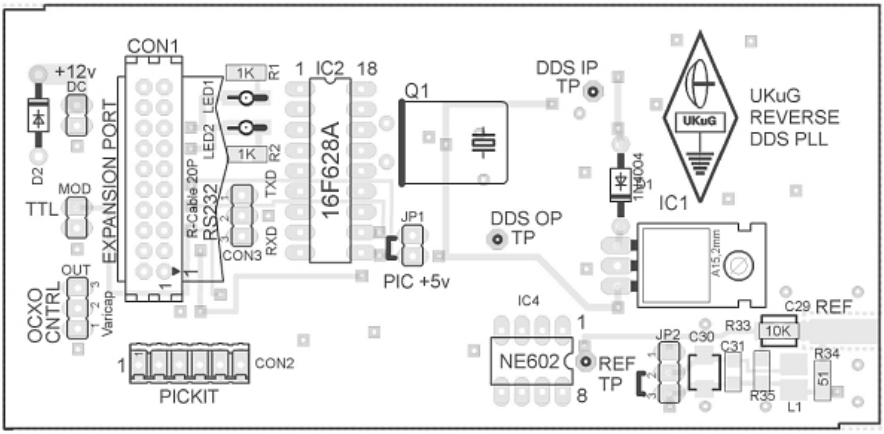

Top and Right:
Topside of pcb showing component layout

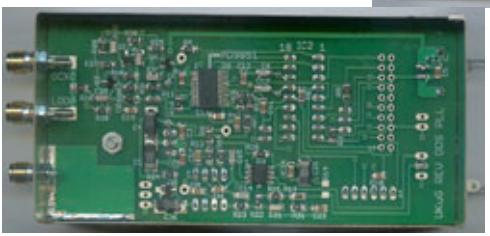

Left and below: Underside of pcb

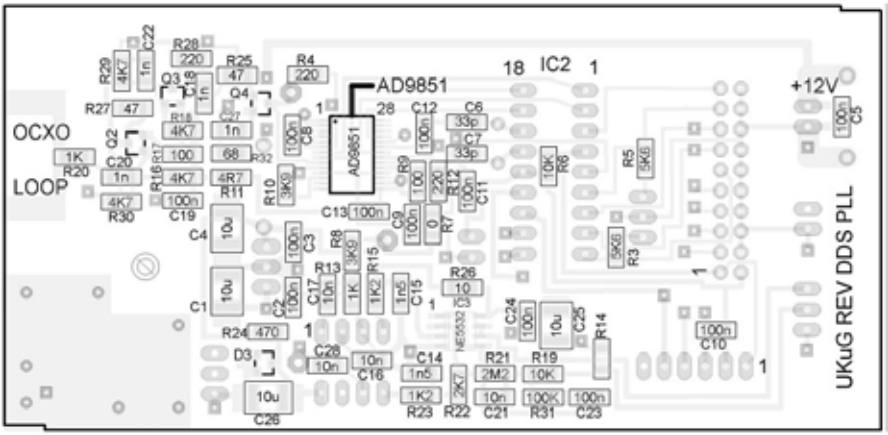

Using the Thales TGTR-23 23GHz Transceiver unit on 24GHz

John Worsnop G4BAO

Introduction

I recently bought a unit on EBay that looked very interesting, from an Israel-based seller "Art-in-Part". The Thales 23GHz transceiver unit appeared to be a complete TX/RX unit with the potential of just needing a local oscillator to make up a 24GHz Transverter. Fig 1 shows the 26GHz version. This article refers to the 23GHz version which is marked TGTR23.

It has TX and RX WG20 ports, and SMA connectors marked TX IF, RX IF and LO. Thought they appear to be mechanically identical, I have not tried to modify a 26GHz version.

Fig 1: Thales 26GHz Transceiver

Connections

I don't have the control pinout (7 pin connector) but they can all be left unconnected. Applying +8 Volts to the unit makes it transmit. The unit takes over an Amp on receive and nearly 2 Amps on Transmit

The power pinout is as follows:

1: +5V
2: GND
3: -12V
4: +8V Transmit

Pin 1 is the one further away from the centre (or closest to the side of the unit

Inside the box

Carefully opening up the box you can see what is inside (Fig 2)

At the top left is a Receiver LNA, to the right and below is a mixer and at the top right is a PA. Looking at the LO filter in the centre it appears that the LO is at 1/2 the final frequency (+/- IF). The filter at the top is at the final frequency as the fingers are about half the size of the LO filter.

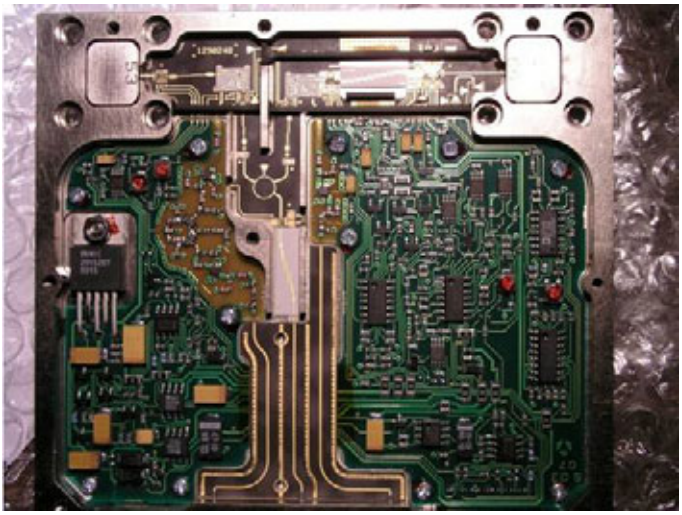

Fig 2: Inside the box (picture F4EXB)

Use on 24GHz

I first applied a low side LO at (24048 –432)/2, i.e 11808MHz, and a 432MHz IF signal. Around –20 dBm at IF and +15dBm at LO produced a saturated output of around 1.2 Watts. I then looked at the output on a spectrum analyser. The LO leakage at 2x11808MHz falls at 23616MHz right in the centre of the passband of the transmitter resulting in an LO level the same as the wanted 24GHz signal! Almost 1 Watt of LO leakage.

Clearly not very good!

I then switched to high side injection at (24048 +432)/2 i.e. 12240 and this was much better. Now the LO leakage was -16 dB down on the carrier, the image at 24912 –23dB down. Adding a waveguide bandpass filter at 24048 in the transmit leg reduces the unwanted signals to below –60dB leaving a clean 1.2Watts of RF at 24GHz.

On receive, with no extra filtering, I measured a conversion gain of 30 dB and a noise figure of 3.3dB. Very acceptable!

Putting it all together

Adding a DB6NT 12GHz multiplier driven from an external G4HUP DDS, +8, +5 and –12 Volt power supplies, a PIC to do some control, sequencing and switching for a Relcom WG22 relay and adaptors, with a coaxial relay on the input you now have a complete 24GHz transverter system that gives a conversion gain of 29dB, and around 4dB noise figure.

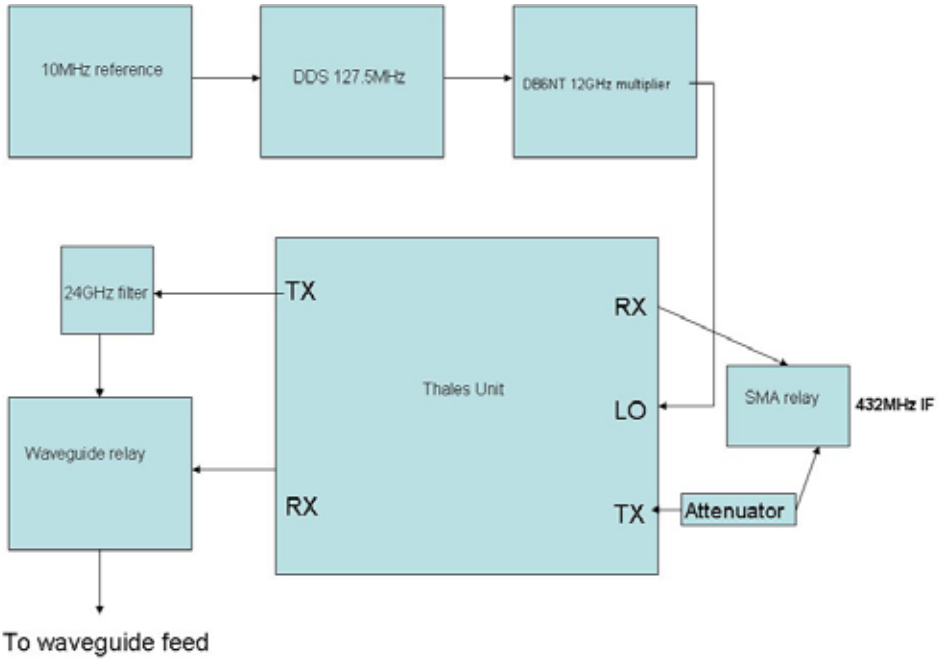

Fig 3: System block diagram

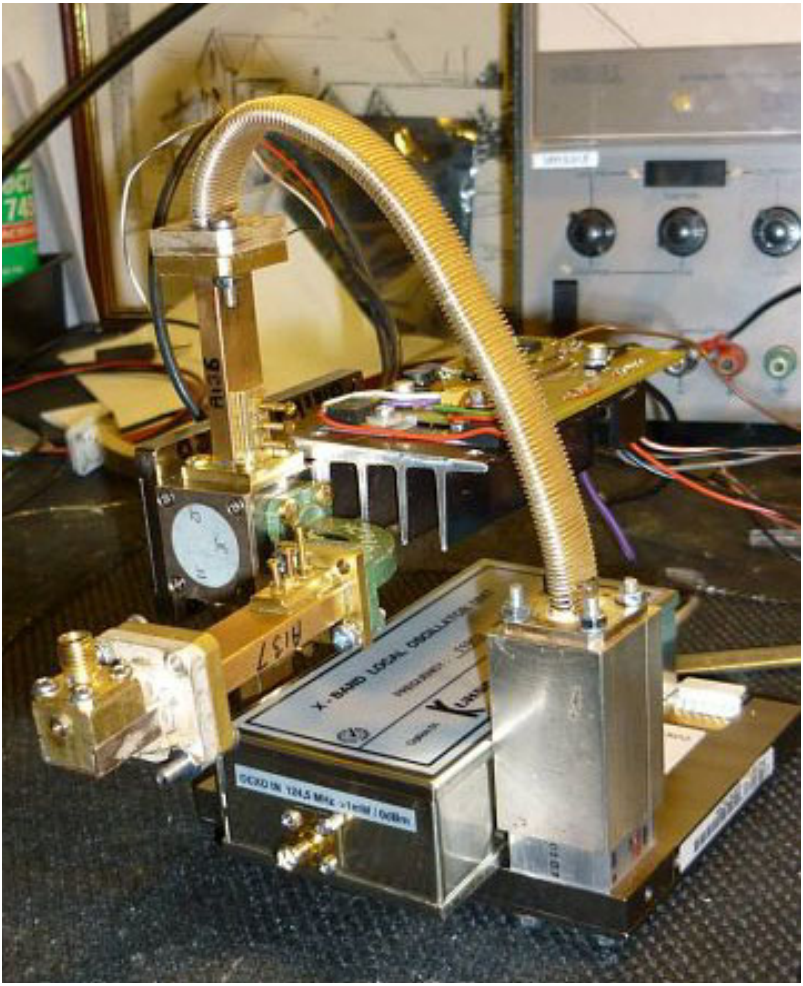

Fig 4 The finished article.
(the Thales unit is underneath!)

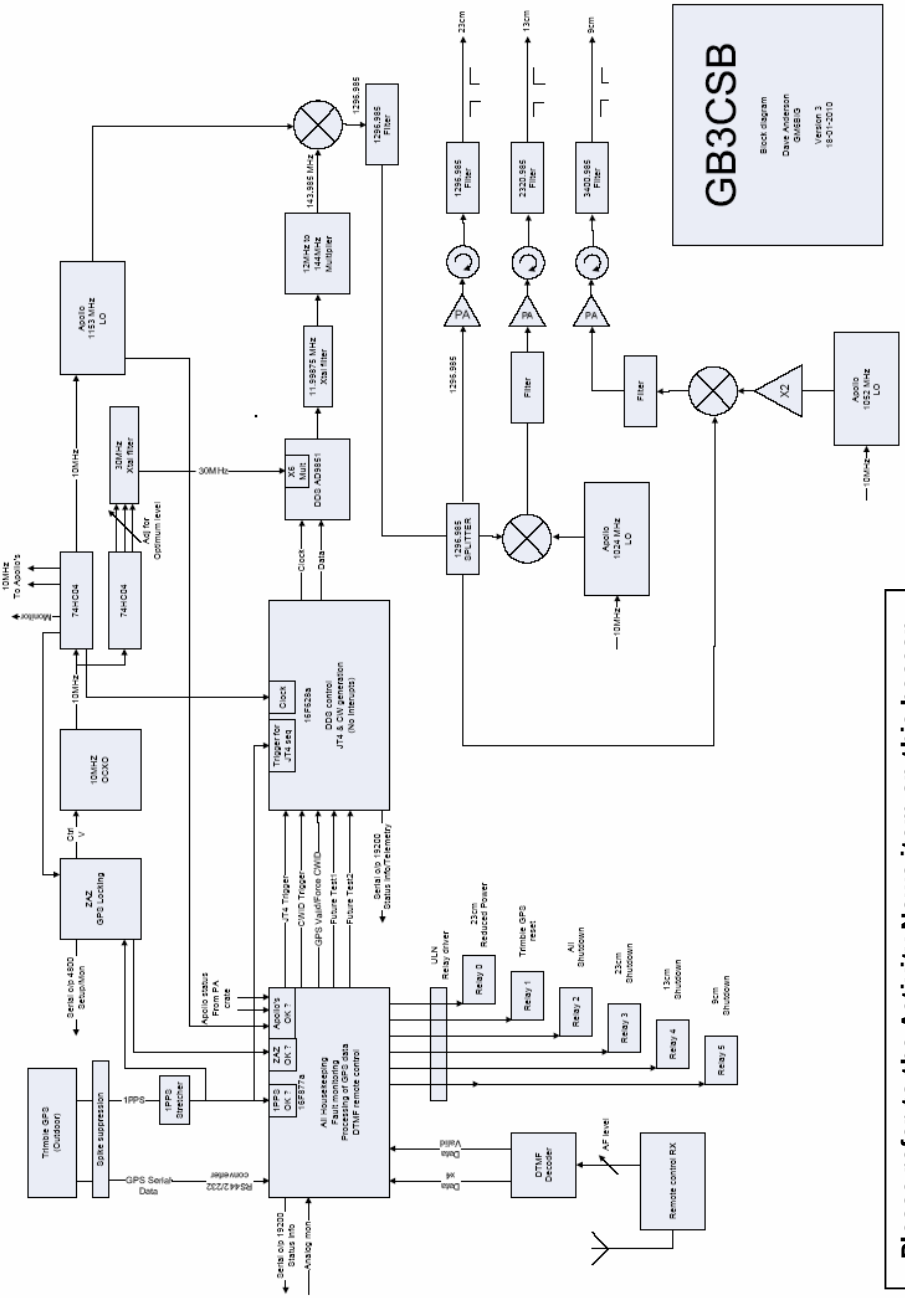

Please refer to the Activity News item on this beacon

ACTIVITY NEWS FROM THE WORLD ABOVE 1000MHz

By Robin Lucas, G8APZ

CONTEST and ACTIVITY REMINDER

March

16-Mar 2000 - 2230 1.3/2.3GHz Activity Contest
Arranged by VHFCC (RSGB Contest)
28-Mar 0900 - 2000 All-band Activity Day
Non competitive (**Last Sunday in month**)

April

11-Apr 0900 - 2000 Low band 1.3/2.3/3.4GHz
20-Apr 1900 - 2130 1.3/2.3GHz Activity Contest
Arranged by VHFCC (RSGB Contest)
25-Apr 0900 - 2000 All-band Activity Day
Non competitive (**Last Sunday in month**)

May

1/2-May 1400 -1400 432MHz & up
Arranged by VHFCC (RSGB Contest)
2-May 0900 - 1700 24/47/76 GHz Cumulative
18-May 1900 - 2130 1.3/2.3GHz Activity Contest
Arranged by VHFCC (RSGB Contest)
30-May 0900 - 2000 1st 5.7GHz Cumulative
30-May 0900 - 2000 1st 10GHz Cumulative
30-May 0900 - 2000 1st 24GHz Cumulative

FRENCH JOURNEES d'ACTIVITE (JA)

These "pre-publication" dates may change. There is no band information available at present.

27/28-Mar Activity weekend - 28th matches UKuG
24/25-Apr Activity weekend - 25th matches UKuG
29/30-May Activity weekend - 30th matches UKuG
19/20-Jun Activity weekend
24/25-Jul Activity weekend - 25th matches UKuG
28/29-Aug Activity weekend
25/26-Sep Activity weekend - 26th matches UKuG

GB3CSB - KEYING PROBLEM ERROR CORRECTION WORKS

From: David GM6BIG, Beacon keeper

Putting **GB3CSB 23cm** on the air before Xmas seemed like a good idea. Get it on the air and be able to play over the holiday season.

Trudging through the two feet of snow, with more gently falling certainly looked pretty. The WX forecast was not good, so the heliax was quickly made off, they bay prepared, and the Trimble GPS antenna mounted. The CSB hardware for **23cm** was put on the air at 21:30 on 22nd Dec. Some quick checks were done and I headed home.

Reports were coming in from over 300km, conditions were fairly flat, with plenty of snow and ice on the antennas helping to degrade the signal. However, it was annoying to see the DT so large, about 2.3. It wasn't supposed to be like that, and because it was so long it upset the following idle frequency and CWID. A program alteration the night before it was installed could easily be the culprit - an extra line of code to ensure it triggered on the correct 1PPS from the GPS. Maybe it was delaying it to the wrong 1PPS and hence the long DT. Still, it was on the air, and being decoded.

The WX had indeed closed in, and there was no chance for two weeks of even getting back to the site. Indeed, if I had walked the two miles of glass ice road up the hill to the site, Walter **GM8IIH** would have appreciated me carrying up some heating oil, he was running low with no hope of a delivery !!

However, all was not that it seemed, the fact it was decoding was just putting me off the trail. When I went back to the site on the first of Feb 2010 and changed the software to the previous version, it made no difference. Uh-Oh.

After much testing on site with Russ **G4PBP**, Ray **GM4CXM** and Mark **GM4ISM** (Mark on site with a portable JT4 decoder), evidence was collected and some guesses were made.

A quick examination of the code showed nothing obvious. Annoyingly, following a guess, I had looked at exactly the correct area of code but missed the error....

Later in the week, with a hot mug of tea in hand and away from the sleet and snow at the site a few nights before, the hunt was on for the problem.

It turned out the symbol length was OK, the T+1 trigger on the 1PPS was OK, but the sequence was simply too long, by almost three seconds! Examination of the WAV files by hand using Spectrogram V4.26 showed an extra 13 symbols, all grouped together, just after the 32nd symbol. Examination of the table holding the symbol sequence revealed the error....

From the .ASM code for the PIC.....
(0 1 2 3 represent each of the 4 JT4 tones).

```
;JT4  -  "GB3CSB IO75XX"
        dt "0022310201323120" ;0-15
        dt "1012000200130022 ;16-31  <== **
        dt "2200022010310130" ;32-47
```

and so on until the end of the table.

Spot the missing **"** near the end of the second line of data (**). This meant the trailing text in that line was wrongly interpreted as symbol data by the assembler, 13 symbols in total (not obvious in the table, there is a Tab involved, so more characters than it looks..).

Each symbol is 228.571mS, multiplying by 13 gives 2.971Sec. Adds up nicely to the observed extra time in the sequence.

So, **GB3CSB** had been running with an error in the transmitted sequence, eating into the forward Error Correction (FEC) and degrading the decode-ability, but not so much it could not be decoded at all!

When I went back to the site (5th Feb) to correct the programming, Mark **GM4ISM** had been experimenting using attenuators to reduce the signal level to see where decoding stopped. After the correction was made, he could add in an extra 2db and still just decode it. A simple check to confirm it was performing better.

Now, back to completing the hardware for the **13cm** and **9cm** beacons...! **73 David**

AIRCRAFT SCATTER ON 23cm

Ray James, **GM4CXM** makes regular long DX contacts on **23cm** by means of aircraft scatter, often during activity contests.

Ray now uses a combination of a virtual radar box, plus **SM0LCB**'s path locator for AS to help spot opportunities. From his observations using the virtual radar, he finds that aircraft positions in/out of Glasgow are between 90 seconds and 2 minutes ahead of what is shown online.

During a recent activity contest, Ray noted that the majority of traffic at the start of the contest was either taking a central or westerly track over England with the majority of eastern flights either descending or ascending so of little use for long range contacts. As the evening drew on just about all traffic of any great height straddled the west side of England.

An end of contest attempt to work Sam **G4DDK** failed but they carried on for around 10 minutes as a high level cargo flight from **DL** to USA approached the coast and looked as if it would pass very close to their midpoint (near Harrogate), but it changed course just before reaching the midpoint!

With these new aids to communication, Ray says it never ceases to amaze him how “hit and miss” it used to be when making AS contacts.

RAINSCATTER SEASON

April onwards marks the start of the rainscatter season in continental Europe, as temperatures over the European land mass encourage the formation of very high localised rain cells.

Stations in the UK tend to be too far from the reflection point much of the time but, bearing in mind that 900km paths are possible on **3cm**, it is always worth looking out for dense rain cells up to 450km away using rain radar maps.

...AND FINALLY

Another month goes by, where the column has only two pages instead of four. The last time I was able to produce four pages was back in October, and since then there has been very little in the way of input. I am hoping that the Spring will kick start some activity, or else the next column may be down to a single page!

73, Robin Lucas G8APZ

Please send your activity news for this column to:

scatterpoint@microwavers.org

MICROWAVING AND DEEP SPACE SEARCH IN CENTRAL RUSSIA

The story of Boris Nikitin, UA3MCJ, and his attempts to build and operate an 8.4GHz receiving station for DSN

... by Peter, G3PHO

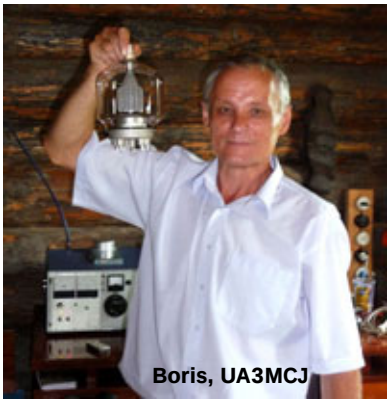
Boris, UA3MCJ

This is the story (so far) of one of the keenest radio amateurs you could hope to meet! In spite of living in a semi-remote, harsh environment and having almost zero access to components, test equipment and information, Boris Nikitin, UA3MCJ, has set his sights on building a receiving station for the 8.4GHz space vehicle band. Those of us here in the UK, or overseas in other microwave affluent areas such as North America, Western Europe and Japan, should think twice before we complain of a lack of resources for Boris has almost none, yet he exudes enthusiasm for microwaves.

For the past couple of years I've been talking to Boris, UA3MCJ, on 14.118MHz SSB around midday GMT. I met him on this frequency as a member of a daily "net" involving VK2JT, VK3UZZ and Eric, G3MWN (who is also a former 10GHz microwaver from the wideband FM days). Eric had befriended Boris before I came a member of the net and had sent him copies of Radcom and one or two of the RSGB Microwave Handbooks. In a Radcom of some years back, Boris read of Paul Marsh's (M0EYT's) first steps into DSN reception using a modified Marconi Blue Cap Satellite TV LNB and immediately decided that he would also have a go at listening for space vehicles such as the Venus Express, Mars Orbiter, etc. He'd been on the HF DX scene for many years and was growing a little tired of it. DSN seemed a real challenge. The problem was where to get the gear!

Enter myself .... Boris soon found out that I was a microwaver over here in the UK and we spent hours (and still do) discussing the subject on 14.118MHz, hopefully educating any Short Wave Listeners in the process!


Summer at UA3MCJ


Winter at UA3MCJ

I soon understood that Boris had major problems if he were to realise his dream of hearing signals from outer space. He lives in a semi remote rural area of Central Russia, some 250 kilometres North East of Moscow and out "in the sticks". He is surrounded by forest and lives in a wooden log cabin style house at some distance from the sealed road

that passes through his small hamlet. Often in winter he is the only resident! His wife Nadia works in Yaroslavl City, around 40km from their home and stays there for the working week.

Winters are long and arduous. This year, temperatures have reached –30C and have been around –20 for long periods. Snow can often be 1 to 2m in depth and blizzards are a regular part of the challenge of living in that region.

On top of the climatic problems, Boris tells me that there are little or no sources of microwave surplus of the kind that we over here in the UK take for granted and would regard as basic and normal. He has no internet access in his area and therefore is at a severe disadvantage when it comes to gathering information. He does have a nice computer however, running the ubiquitous Windows operating system and can read PDFs and the like. So far I've been his only "pipeline", supplying parts and some surplus items such as an LNB, a nice 7.6GHz PLL local oscillator block and various small items including sma connectors and semi rigid coax. These have always got through to him although it can take one to two months, even at airmail rates! Strangely though, two A4 envelopes of printed information I sent have failed to reach him. These contained, among other amateur microwave resources, lists of space vehicle frequencies in the 8GHz region. Maybe they were thought to be "classified information" by whichever authority intercepted them!

Spot the Marconi Blue Cap LNB in UA3MCJ's RX head unit !

Recently there has been a major development in Boris's resources .... his daughter, who lives in the city, now has broadband internet facilities and so at last I'm able to email Boris (ua3mcj@mail.ru) and send him information that would probably not get there if it were sent by normal post. Boris has to travel to Yaroslavl City to copy this information onto a memory stick and bring it back home to work on it, or Nadia, his wife, arranges to print it onto paper and brings it with her at the weekend. Some weeks ago, she printed out the whole of Paul Wade's, W1GHZ's, Microwave Antenna handbook from the PDF copy that I had I emailed to Boris!

I'm constantly amazed at Boris's hunger for information. Recently, over a period of several days, I spent hours on the 20m band with him designing a cassegrain subreflector and feedhorn for his 1.5m dish. This dish, which he was very lucky to obtain from a local source, has an f/D of 0.25, not the ideal dish for feeding efficiently with a modified satellite LNB! So we decided to try a cassegrain system with a virtual f/D of around 0.66. I contacted W1GHZ and let Paul see some of the feedhorn calculations I'd done for Boris, using Paul's design software mention in his Microwave Antenna Handbook. We used the G7MRF Cassegrain spreadsheet for the sub reflector. Paul was very helpful in suggesting some refinements and Boris now has all the calculations, including Paul's software and has prepared a template for making the sub reflector. However, this has brought up another problem... how and where to machine a block of aluminium to fabricate the subreflector. Whereas you and I might know someone has a lathe to turn up the item, Boris has no one within miles to do this. Even if he found someone the chances are that the person could be unreliable. It may very well be that Boris's first attempt will be made of wood, covered in aluminium foil.

Boris is presently using a Marconi Blue cap LNB which I modified for him according to Paul Marsh M0EYT's article in Scatterpoint a few years ago. While the LNB is certainly not state of the art, it should provide a useful starter kit until something more exotic comes along at a price I can afford

This RF head unit will have a weather-proof cover when fixed to the dish

to ship out to Russia. Ideally, a DB6NT downconverter for the band would be fabulous!

If anyone reading this has something they think could be useful to Boris and is willing to donate it then please contact me and I'll do the rest.

My conversion of the LNB included provision for a high stability external local oscillator (see photo left) . I found it at Martlesham in 2008, at the "silly" low price of only £10 (thanks Mike G0MJW!). Since Boris has no microwave test gear at all, I did the modifications to the LNB and adjusted the PLL LO using my spectrum analyser. While I don't have an accurate counter at 8.4GHz I was able to bring the system within Boris's IF range of 600-900 MHz but the frequency accuracy is not yet good enough to "spot" the space vehicle frequencies with any certainty. His next requirement therefore is an accurate marker signal or a good frequency counter for that area of the microwave spectrum. His receiver IF is a panoramic one so he should be able to see space probe signals on its display, if they are strong enough. Another useful facility for him would be some form of waterfall display and digital noise reduction software such as Spectran.

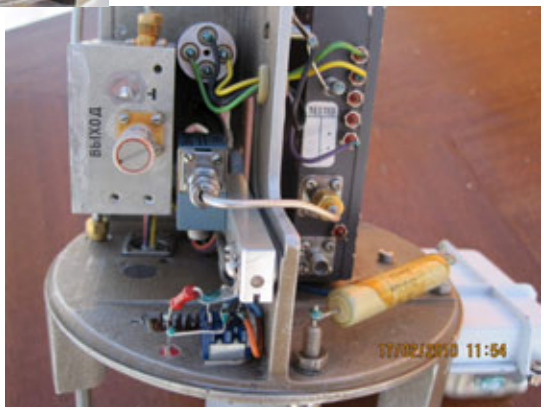

Above: Homemade RF Head power supply

Boris is an experienced home constructor and has made much of his HF station. For many years he was a radio officer in the Russian merchant navy and travel the world far and wide. He has an excellent command of the English language and can cope with technical books and magazines. Anyone who has a common interest with him is very welcome to contact him either on 14.118MHz SSB around the UK lunchtime or email him at:

ua3mcj.mail.ru

Right: Boris working 20m